ELECTRICAL CHARACTERISTICS

CENTER FREQUENCY:	4250 MHz NOM
3 db BANDWIDTH:	350 MHz
PASSBAND:	4100–4400 MHz
FLATNESS:	<1.0 dB
PASSBAND VSWR:	1.7:1
INSERTION LOSS:	<1.75 dB
REJECTION:	> 68 dBc @ DC–3601 MHz
	> 35 dBc @ 4600–5200 MHz
	> 60 dBc @ 5200–6000 MHz

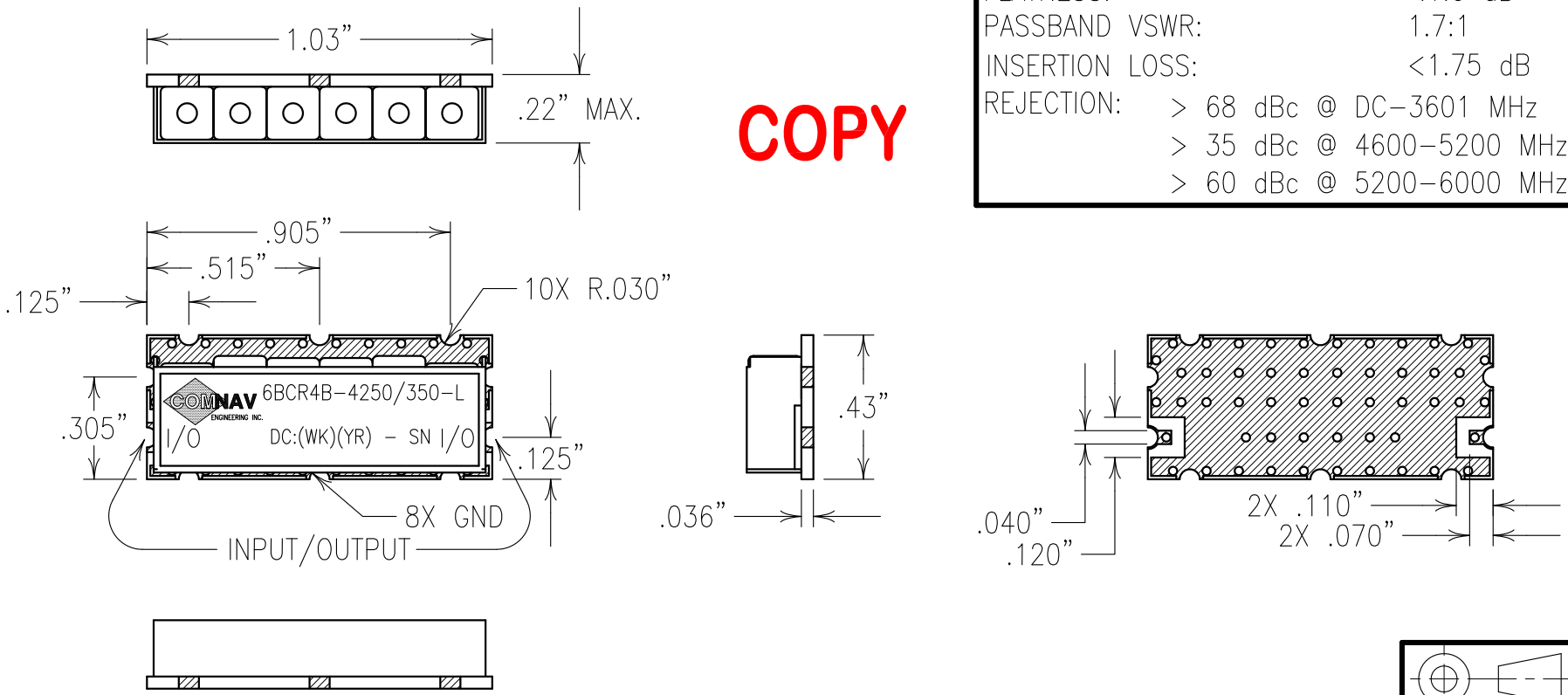

COPY

Confidential and Proprietary information of ComNav Engineering Inc. Do Not Duplicate or Use Without Permission. ComNav Engineering Inc. claims Copyright in this document as of the Creation, last revision, and last updated dates. All Rights Reserved.

NOTES:

RECOMMENDED ATTACHMENT METHOD:
SILVER EPOXY OR REFLOW NOT TO EXCEED:

TEMP.(°C)	MAX. TIME (SECONDS)
215	90
230	60
245	30
260	15

FILTER IS ROHS COMPLIANT.
FILTER MAY BE LABELED OR ETCHED.

ENGLISH / METRIC ENGLISH	CHECKED BY				
TOLERANCES UNLESS OTHERWISE SPECIFIED MACHINED SURFACES TO BE 125 OR BETTER REMOVE ALL BURRS	DRAWN BY PBF	A	01OCT10	KJR	DEV.	GEN. REV. PER 3264
	ENGINEER KJR	II	01JUL10	KJR	DEV.	INI. ISS. PER 3228
		REV	DATE	BY	DCN No.	REMARKS
ENGLISH (INCHES) .XX ±.02 .XXX ±.01 / METRIC (MM) .X ±.25 .XX ±.13	SCALE 2:1	APPLIC: CERAMIC COAXIAL FILTER			
ANGLES ± 0° 30'	DATE 12OCT10	TITLE: 6BCR4B–4250/350–L			
COMNAV ENGINEERING INC.	FINISH: BOARD: NI/AU JACKET: NI/SILVER RESONATOR: SILVER	DRAWING No. OL1105			SHEET/OF 1 1