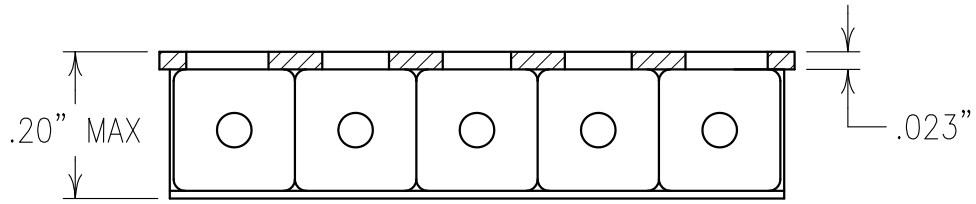

COPY

ELECTRICAL CHARACTERISTICS

CENTER FREQUENCY: 2150 MHz
0.5 dB PASSBAND: 2070–2230 MHz
INSERTION LOSS: 1.5 dB MAX @ 2150 MHz
PASSBAND VSWR: 1.8:1 MAX
PASSBAND GROUP DELAY LINEAR: 5.0 nSEC MAX
REJECTION:
33 dBc MIN @ 1950 MHz
28 dBc MIN @ 2350 MHz
20 dBc MIN ULTIMATE OUT TO 5.8 GHz

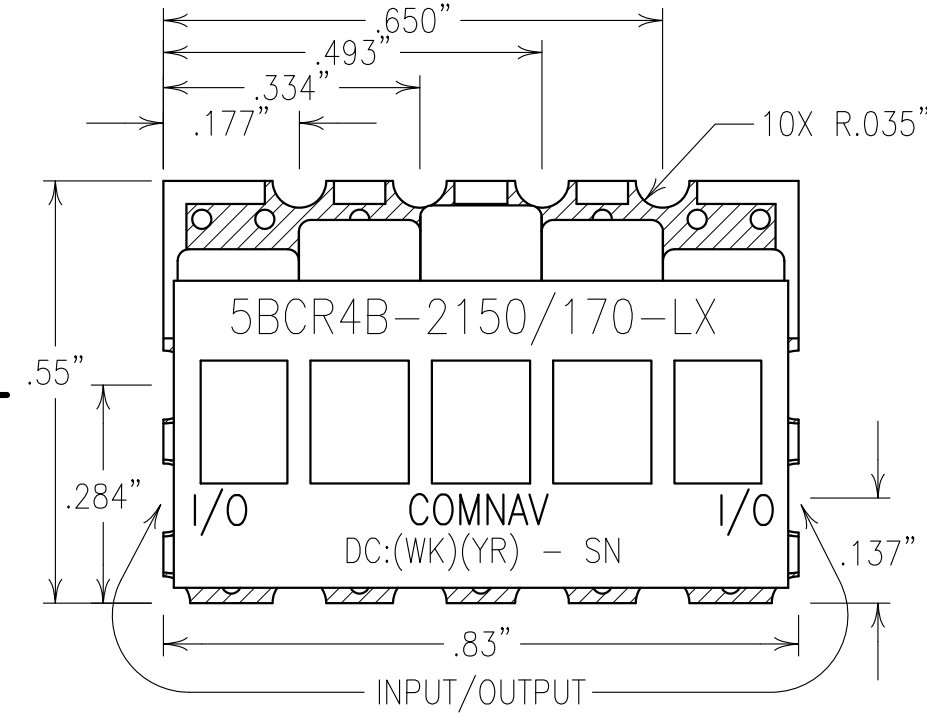

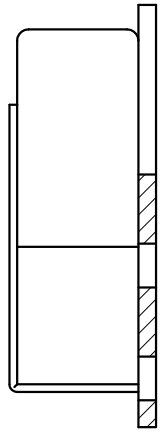

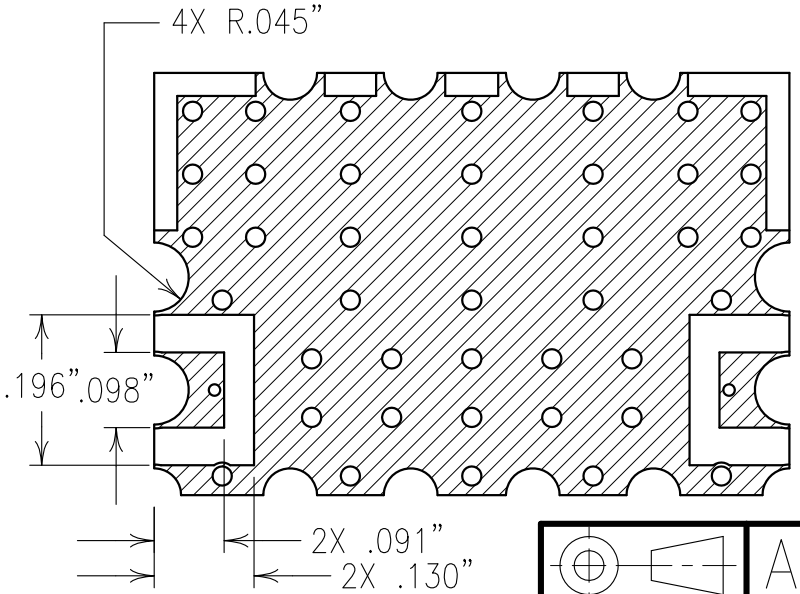

A

Confidential and Proprietary information of ComNav Engineering Inc. Do Not Duplicate or Use Without Permission. ComNav Engineering Inc. claims Copyright in this document as of the Creation, last revision, and last updated dates. All Rights Reserved.

NOTES:

RECOMMENDED ATTACHMENT METHOD:
SILVER EPOXY OR REFLOW NOT TO EXCEED:

TEMP.(°C)	MAX. TIME (SECONDS)
215	90
230	60
245	30
260	15

FILTER IS ROHS COMPLIANT.
FILTER MAY BE LABELED OR ETCHED.

ENGLISH / METRIC: ENGLISH	CHECKED BY				
TOLERANCES UNLESS OTHERWISE SPECIFIED: MACHINED SURFACES TO BE 125 OR BETTER; REMOVE ALL BURRS	DRAWN BY: PBF				
	ENGINEER: KJR	II	13MAR10	KJR	DEV.	INI. ISS. PER 3194
		REV	DATE	BY	DCN No.	REMARKS
ENGLISH (INCHES): .XX ±.02, .XXX ±.01 / METRIC (MM): .X ±.25, .XX ±.13	SCALE: 4:1	APPLIC: CERAMIC COAXIAL FILTER			
ANGLES ± 0° 30'	DATE: 15MAR10	TITLE: 5BCR4B-2150/170-LX			
COMNAV ENGINEERING INC.	FINISH: BOARD: NI/AU; JACKET: NI/SILVER; RESONATOR: SILVER	DRAWING No. OL1077	SHEET/OF 1 1		