COMNAV PART#
4BCR8B-2287.5/22-D
4BCR8B-2287.5/26-D

ELECTRICAL CHARACTERISTICS	
CENTER FREQUENCY:	2287.5 MHz
3dB BANDWIDTH (*):	22, 26 MHz MIN.
20 dB BANDWIDTH:	2X 3dB BW MHz MAX
LOSS @ fo:	<3.0 dB
VSWR:	1.7:1 TYP.

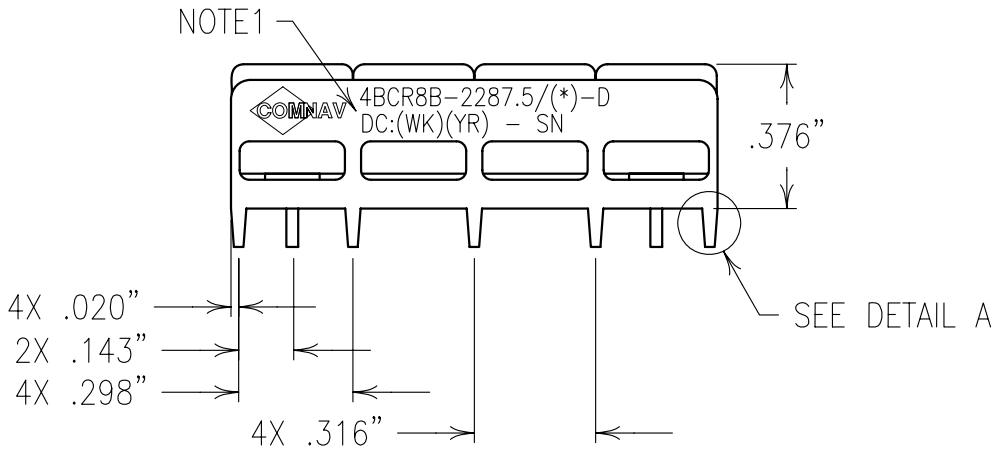

COPY

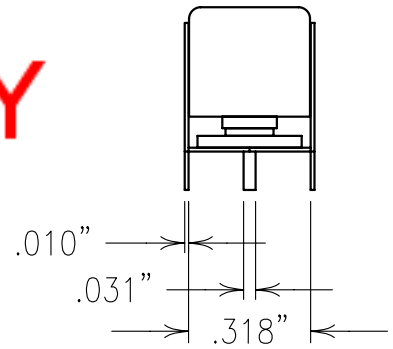

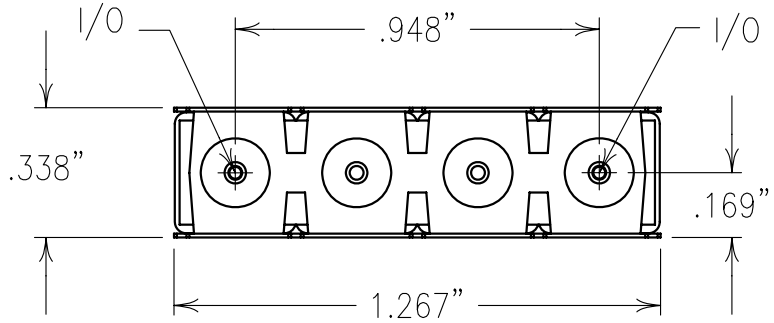

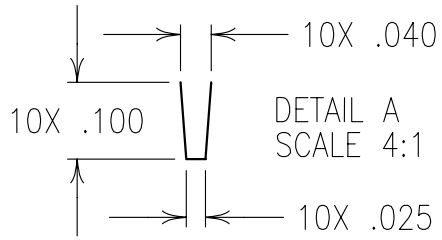

Confidential and Proprietary information of ComNav Engineering Inc. Do Not Duplicate or Use Without Permission. ComNav Engineering Inc. claims Copyright in this document as of the Creation, last revision, and last updated dates. All Rights Reserved.

A

NOTES:

1) DC: IS ON ONE SIDE ONLY.

FOR RECOMMENDED FOOTPRINT SEE FP0075.

ENGLISH / METRIC: ENGLISH	CHECKED BY					
TOLERANCES UNLESS OTHERWISE SPECIFIED MACHINED SURFACES TO BE 125 OR BETTER REMOVE ALL BURRS	DRAWN BY: PBF					
	ENGINEER: MJG	II	05MAY03	TLA	DEV.	INI. ISS. PER 2079
		REV	DATE	BY	DCN No.	REMARKS
ENGLISH (INCHES): .XX ±.02, .XXX ±.010 — METRIC (MM): .X ±.50, .XX ±.25	SCALE: 2:1	APPLIC: CERAMIC COAXIAL FILTER				
ANGLES ± 0° 30'	DATE: 06MAY03	TITLE: 4BCR8B-2287.5/(*)-D				
COMNAV ENGINEERING INC	FINISH: JACKET: NI/SILVER; RESONATOR: SILVER; PINS: TIN PLATED	DRAWING No. OL0467				SHEET 1 OF 1