2 1

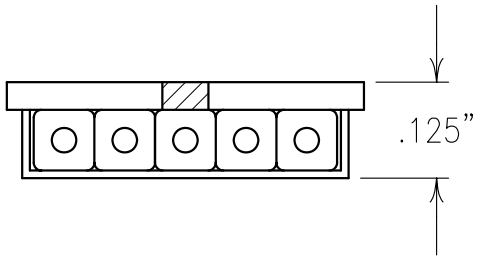

COPY

ELECTRICAL CHARACTERISTICS

CENTER FREQUENCY:	1600, 1700, 1800, 2000 MHz
VSWR:	1.5:1 TYP
INSERTION LOSS:	5.5 dB MAX AT FO
REJECTION (FO±100 MHz):	65 dBc MIN
3 dB BANDWIDTH:	40 MHz MIN
STORAGE TEMP. RANGE:	−54° TO 120°C

B

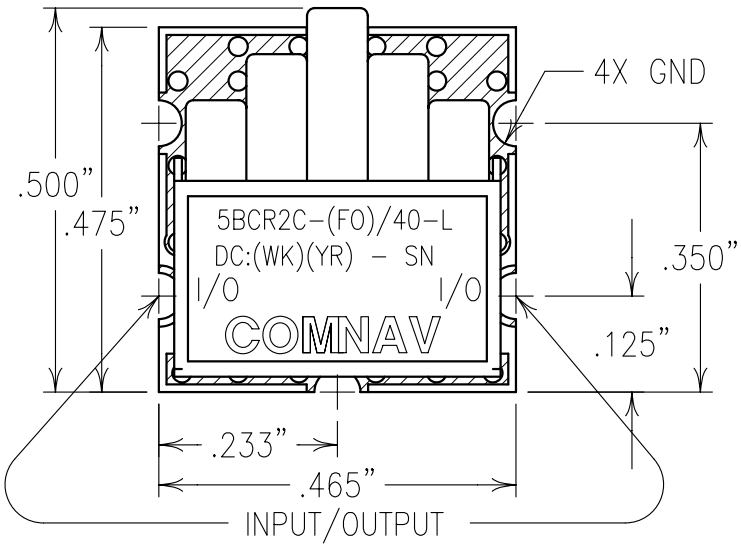

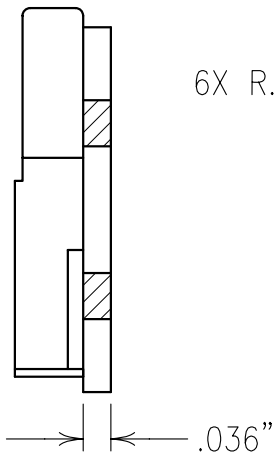

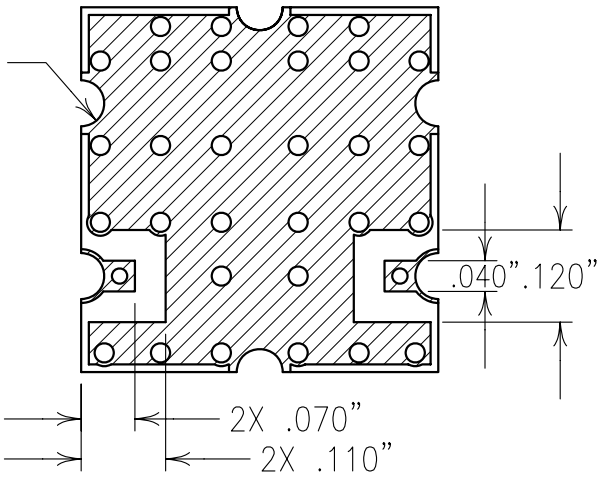

Confidential and Proprietary information of ComNav Engineering Inc. Do Not Duplicate or Use Without Permission. ComNav Engineering Inc. claims Copyright in this document as of the Creation, last revision, and last updated dates. All Rights Reserved.

A

NOTES:

RECOMMENDED ATTACHMENT METHOD: SILVER EPOXY OR REFLOW NOT TO EXCEED AS INDICATED BELOW:

TEMP.(°C)	MAX.TIME(SEC)
215	90
230	60
245	30
260	15

FILTER IS ROHS COMPLIANT.
FILTER MAY BE ETCHED OR LABELED.

ENGLISH / METRIC: ENGLISH	CHECKED BY					
TOLERANCES UNLESS OTHERWISE SPECIFIED	DRAWN BY: PBF	A	27MAR06	PBF	DEV.	GEN. REV. PER 2506
MACHINED SURFACES TO BE 125 OR BETTER	ENGINEER: GML	II	20MAR06	GML	DEV.	INI. ISS. PER 2502
REMOVE ALL BURRS		REV	DATE	BY	DCN No.	REMARKS
ENGLISH (INCHES): .XX ±.01, .XXX ±.005 / METRIC (MM): .X ±.2, .XX ±.13	SCALE 4:1	APPLIC: CERAMIC COAXIAL FILTER				
ANGLES ± 0° 30'	DATE 27MAR06	TITLE: 5BCR2C-(FO)/40-L				
COMNAV ENGINEERING INC	FINISH: BOARD: NICKEL/GOLD; JACKET: NICKEL/SILVER; RESONATOR: SILVER	DRAWING No. OL0641				SHEET 1 OF 1

A